Do Not Mix Models: Revisiting Generic Transforms for Committing Authenticated Encryption

Kazuhiko Minematsu and Akiko Inoue (NEC)

Asian Symmetric-key Cryptography (ASK) 2026
21, March 2026, Singapore, Singapore

https://eprint.iacr.org/2026/240

Background (AE)

- Authenticated encryption (AE): encryption and authentication at one primitive
- One of the main research objects for more than 2 decades
  - Numerous schemes, standards, competitions/standardizations

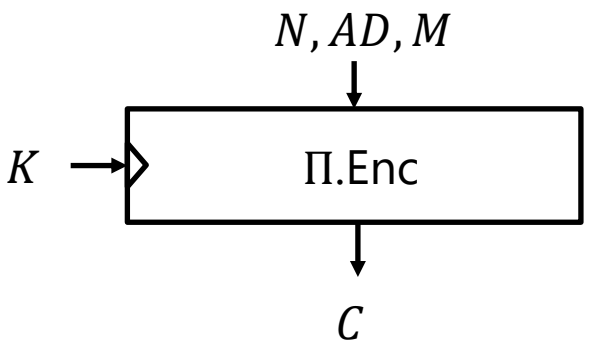

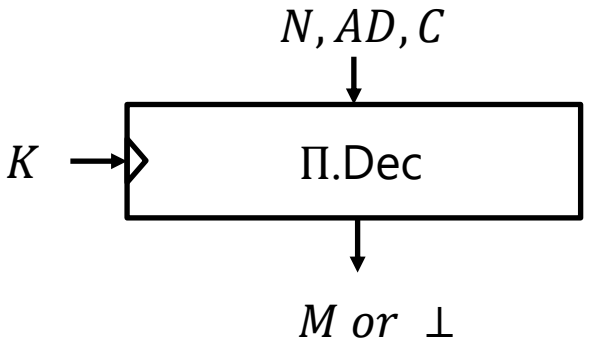

Background (committing security)

- Recent hot topic: committing (CMT) security
- Hardness of finding a valid input tuple including keys given a valid ciphertext C
  - $(K, N, AD, M) \neq (K', N', AD', M')$ so that $\Pi.\mathrm{Enc}(K, N, AD, M) = \Pi.\mathrm{Enc}(K', N', AD', M') = C$
  - If no restriction on the input tuple, the strongest notion, **context-committing (CMT-4)**
- Known AEs typically do not satisfy CMT, because they are not designed so
- Lack of CMT security leads to several real-world problems
  - Message franking by Facebook, Partitioning oracle attack, SFrame attack and many more

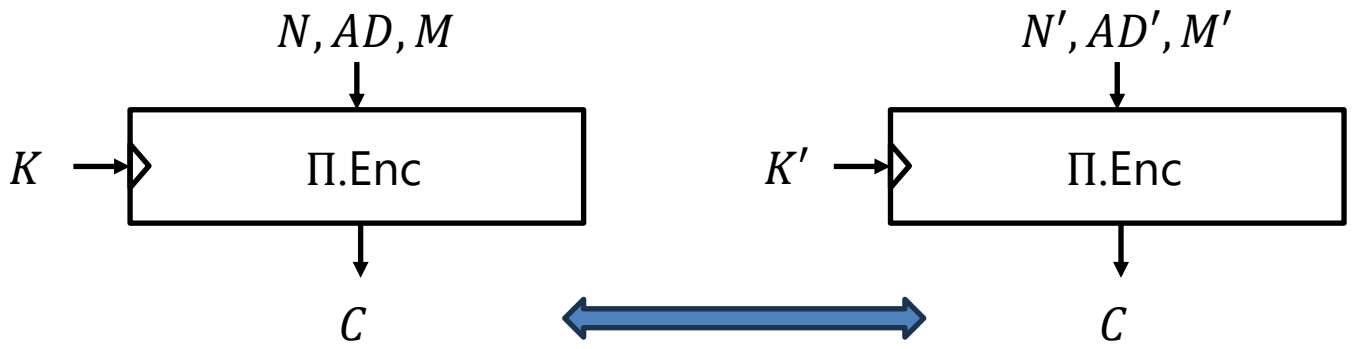

Two approaches to Committing AE

1. Design from existing (non-CMT-sec) ones

- GCM, OCB
- Generic composition

2. Generic transform:

- a wrapper mechanism GT that converts "any" secure AE Π into a CMT-secure AE ($\Pi \rightarrow GT(\Pi)$)
- Practically relevant

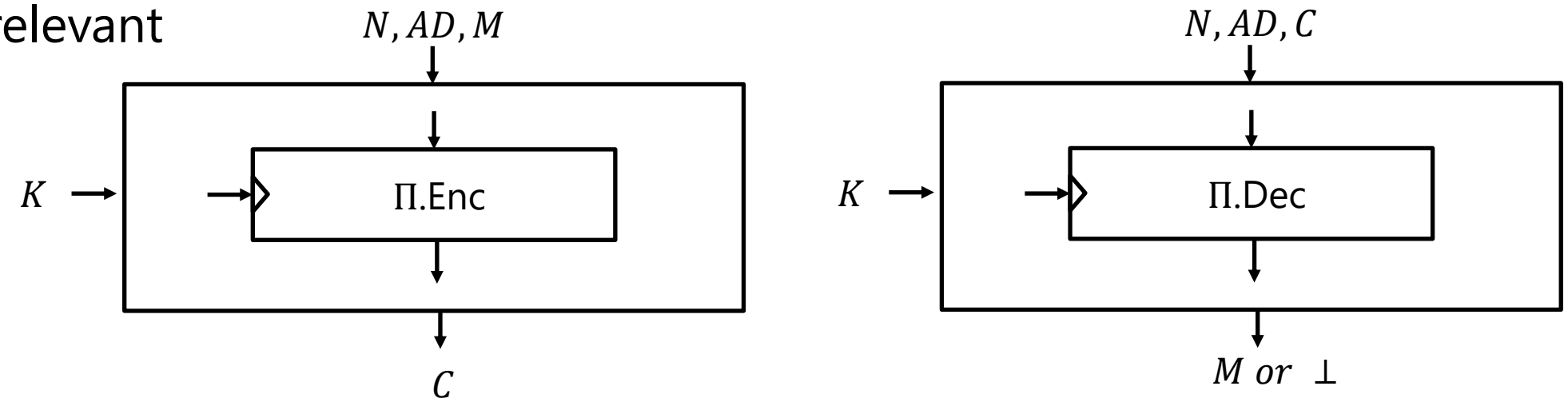

Generic Transform

- Generic transform: $\mathrm{GT}\,[\,\Pi,\ \mathrm{X}\,]$ for additional component(s) X
  - All elements of X are typically keyless, e.g. a hash function
- Security goal of GT: AE security and CMT security for $\mathrm{GT}\,[\,\Pi,\ \mathrm{X}\,]$
  - AE security = PRIV (IND-CPA) security + AUTH (INT-CTXT) security
- Provable security reductions to AE security of Π (PRIV, AUTH) and some assumptions on X

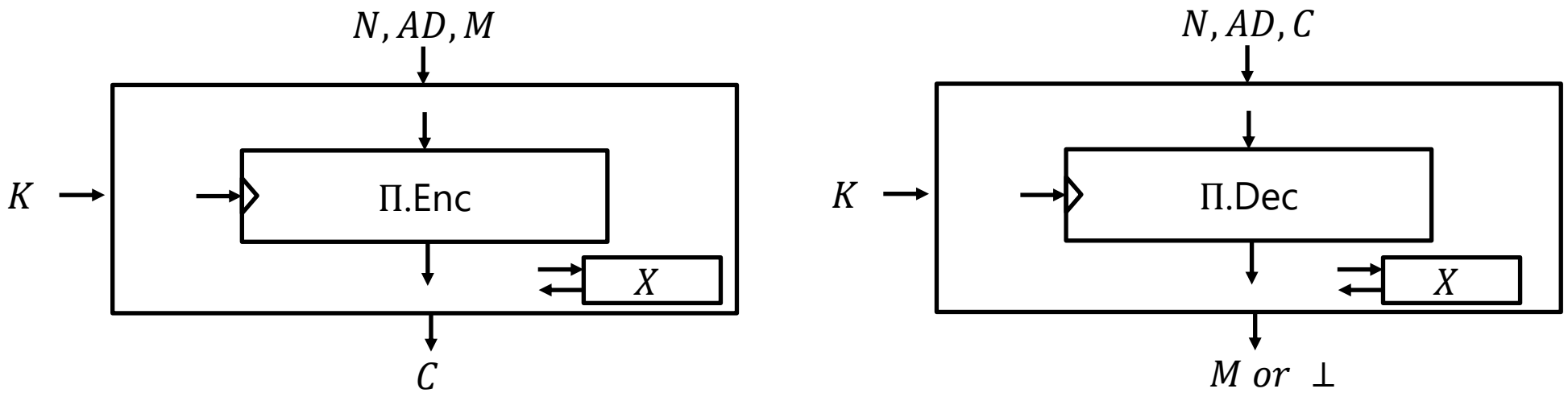

CTX [CR22]

- Simple and elegant transform
- AE to CMT(-4)-secure AE
- Not strictly generic
  - Limited to "Tag-based" AE (e.g. GCM, OCB)
  - Decryption interface needs to be changed

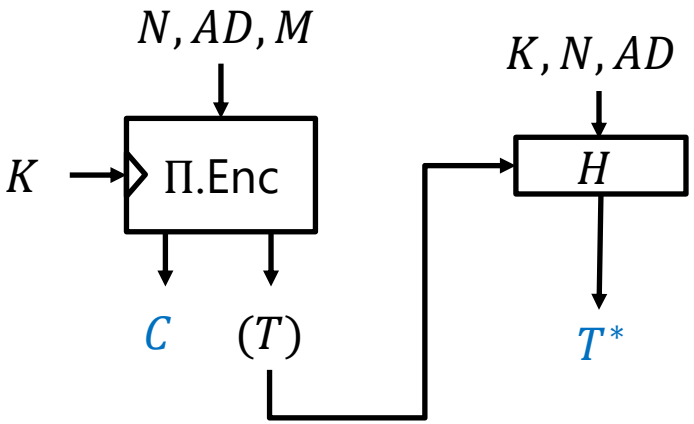

[CR22] Chan and Rogaway. On Committing Authenticated Encryption, ESORICS 2022

Our Motivation

Revisiting existing GTs: are they truly generically secure?

Chen and Karadžić 2025

Chen and Karadžić, Eurocrypt 2025 (also https://eprint.iacr.org/2025/320)

- Three basic generic transforms: HtAE, AEaH, EtH
- Two advanced generic transforms: AEtH and chaSIV
- Features:
  - **Strictly generic**
  - Preserving (Nonce-based) AE security of Π
    - MRAE preservation for advanced schemes
  - Proving CMT-4 and CDY (context discovery: out of our focus)
  - Main ingredient: hash function $H: \{0,1\}^* \to \{0,1\}^n$

[CK25] Committing Authenticated Encryption: Generic Transforms with Hash Functions. Chen, Karadžić, Eurocrypt 2025

Example of CK25 transform: AE and Hash (AEaH)

- AE Π takes (K, N, ε, M), output C
- Hash H takes (K, N, AD), output T
- Total output: (N, AD, C, T)
  - Output gets longer, a cost to pay make it generic
- Decryption: perform AE decryption and hash check, accept if both OK

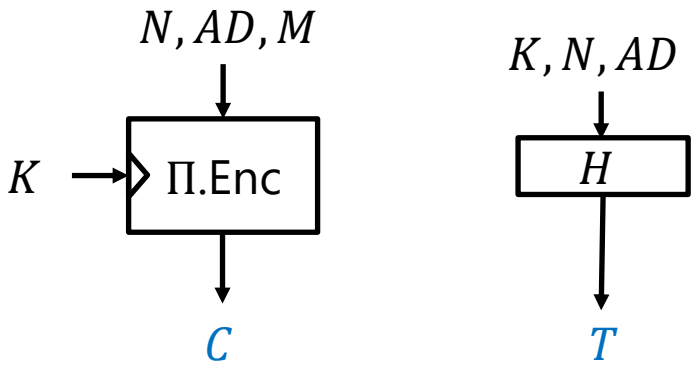

Security claims of AEaH

- PRIV/AUTH bounds are proved assuming
  - H = RO
  - Π = AE-secure
- CMT bound is proved assuming H=CR hash
- Other CK25 schemes use similar assumptions

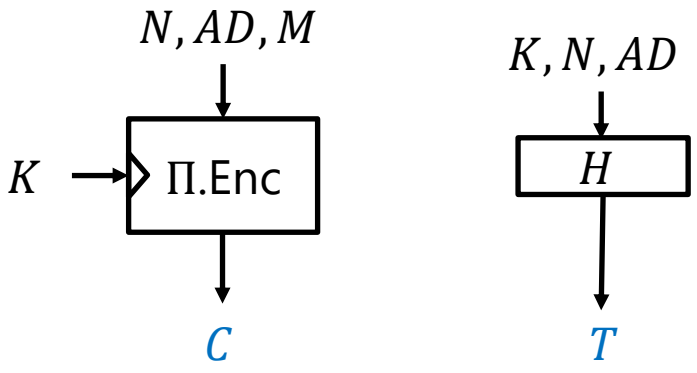

Mixing two security models

- **A mix** of standard and idealized models. Theoretically fine, but how to instantiate?
- H would be instantiated by a concrete algorithm such as SHA-2/3
- What if this instantiated H is also used by Π ?
- Out of the mixed model (RO is not instantiable),
- But practical: GT must be independent of AE, but AE **can** depend on (the algorithm of) GT

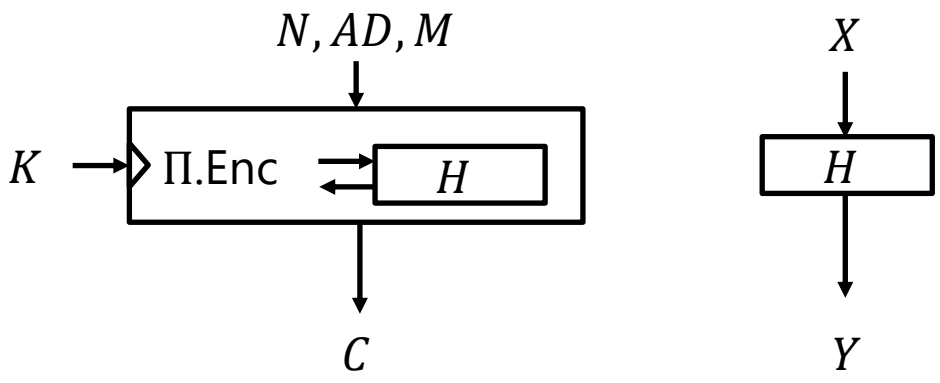

Our Contributions

- State-of-the-art GTs (implicitly) relying on a mixed model are broken **once instantiated**
  - For CK25 transforms: 5 GTs proposed, 4 GTs broken
  - For Bhattachrjee, Bhaumik and Dhar (ePrint 2024/1382) [BBD24]: 2 GTs proposed, both broken

- We fix broken CK25 transforms by key separation (KS)

[BH24] M. Bellare and V. Hoang. Succinctly-Committing Authenticated Encryption. Crypto 2024.

Attack Summary

Scheme	Strictly generic?	Nonce-based Rekey	Sec. Model	Priv ATK	Auth ATK	Key recov.
CTX [CR22]	N		Mixed	?	?	?
CTY [BH24]	N		Mixed	?	?	?
HtE-UtC/RtC [BH22]	Y	Y	Standard			
HtAE [CK25]	Y	Y	Mixed	?	?	?
AEaH [CK25]	Y		Mixed	**Y**	**Y**	**(Y)**
EtH [CK25]	Y		Mixed	**Y**	**Y**	**(Y)**
AEtH [CK25]	Y		Mixed	**Y**	?	**(Y)**
chaSIV [CK25]	Y	Y	Mixed	**eY**	?	**(eY)**
PACT [BBD24]	~Y		Mixed	**Y**	**Y**	**(Y)**
comPACT [BBD24]	~Y		Mixed	**Y**	**Y**	**(Y)**

~Y: API is generic, AE needs addit. condition.

(Y): attackable w/ slightly artificial AE inst.

eY: attackable w/ some GT insts.

[BH22] Bellare and Hoang. Efficient schemes for committing authenticated encryption. Eurorypt 2022
[BH24] Bellare and Hoang. Succinctly-committing authenticated encryption. Crypto 2024

Attacks

PRIV (IND-CPA) attack against AEaH

- Let AE.Enc = Enc-then-MAC
- Enc = CTR w/ $H(K, N, ctr)$
  - $ctr = 1,2, \ldots$
  - easily realize a secure EtM-AE assuming $H(K,*)$ = PRF
  - MAC can reuse $H(K,\cdot)$ with a domain separation

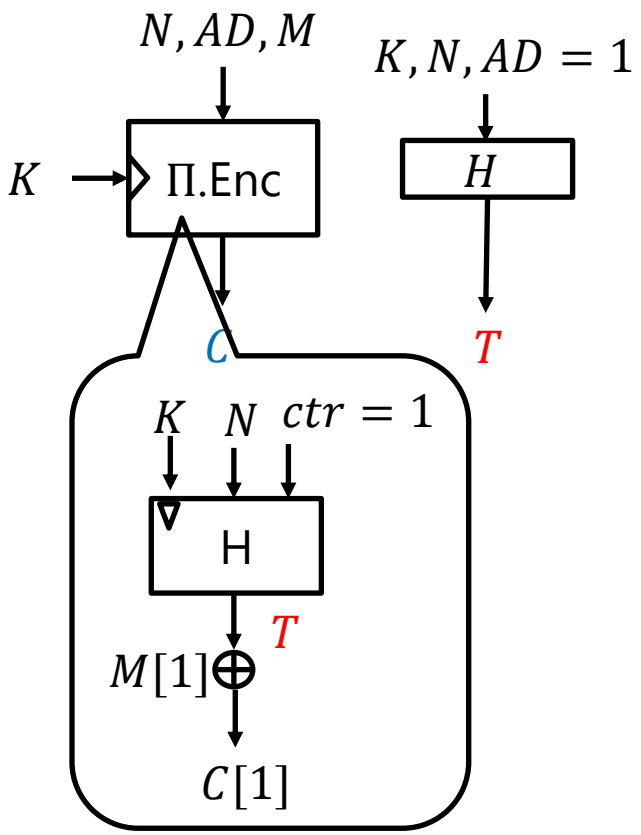

PRIV attack

1. Encrypt (N, AD, M) w/ $AD =$ "1". $M = M[1]M[2] \ldots$
2. Receives (C, T)
3. Checks if $C[1] \oplus T = M[1]$. If so "real", otherwise "random"

In the real world:

$(C, T) = \mathrm{AEaH}(K, N, AD, M)$, $C[1] = M[1] \oplus H(K, N, 1), T = H(K, N, 1)$. → PRIV break

When M is unknown, this implies (partial) plaintext recovery

AUTH (INT-CTXT) attack against AEaH

- Let AE.Enc = ~GCM w/ H as a primitive
- $C = (\tilde{C}, \tilde{T})$ s.t.
- $\tilde{T} = GH(L, AD, \tilde{C}) \oplus H(K, N, AD)$, L is derived from K (as in GCM)
  - AD in H may be any constant cst (attackable by choosing AD = cst in the enc query anyway)

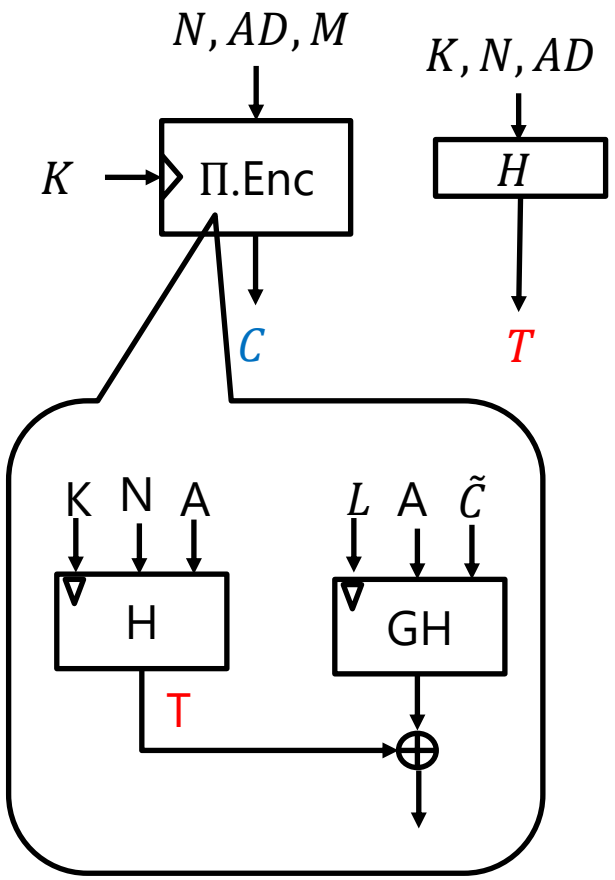

AUTH attack

1. Encrypt (N, AD, M). Receives $(C = (\tilde{C}, \tilde{T}), T)$=AEaH$(K, N, AD, M)$
2. $T \oplus \tilde{T} = H(K, N, AD) \oplus GH(L, AD, \tilde{C}) \oplus H(K, N, AD) = GH(L, AD, \tilde{C})$ → reveals L. same as GCM nonce-reuse attack
3. Decrypt $(N, AD, C' = (\tilde{C}', \tilde{T}'), T)$ for any $\tilde{C}'$, $\tilde{T}'$ computed from L and T

→ AUTH break, almost universal forgery

Key recovery attack against AEaH

- Modify AE in PRIV attack as
- $C[1] = M[1] \oplus H(K, N, 1) \oplus K$
  - This is "usually" secure; consider H = SHA-3
  - When $|K| > n$ slight extension works

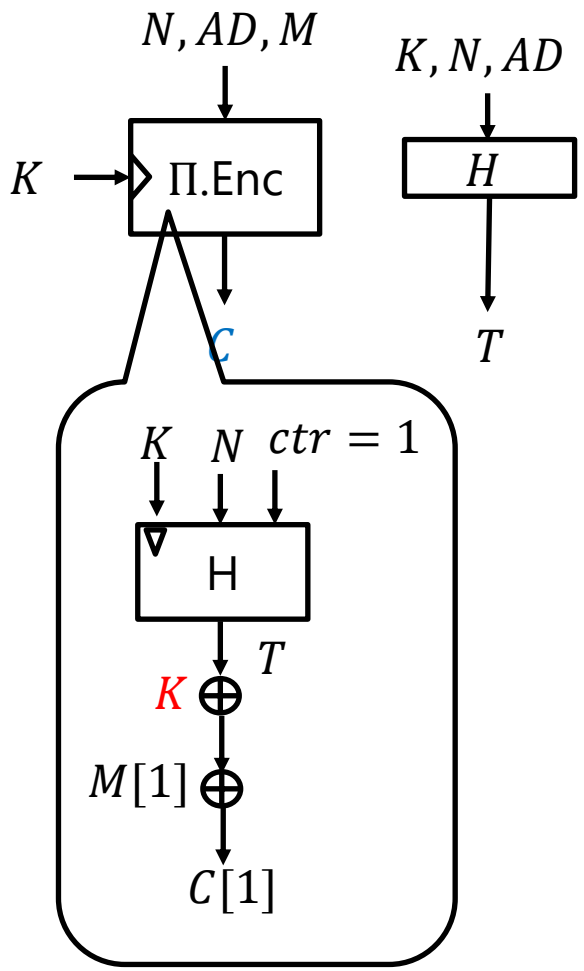

Key recovery attack (same as PRIV attack)

1. Encrypt (N, AD, M) w/ AD = "1".
2. Receives (C, T)=AEaH(K, N, AD, M)
2. $M = M[1]M[2] \ldots, C = C[1]C[2] \ldots$, $C[1] = M[1] \oplus H(K, N, 1) \oplus K$, $T = H(K, N, 1)$.
3. $C[1] \oplus T \oplus M[1] = K$. → Key recovery

Remark: inst. of H should be strong, no clear need to add outer K inside CTR mode of AE (in this sense, slightly artificial)

Impact of the attacks

- AEaH is "uninstantiable": attacks work with any instantiation of H
  - broken regardless of the assumption on H!
- Attacks exploit "natural" AE: Generic composition based on PRF $H(K,*)$
  - ideal situation for implanting a backdoored AE…

- Uninstantiablity is a known classic issue of RO [CGH04], but the principle of this attack is largely different from classic attacks

- Did we invalidate the original proofs? Maybe no
  - Depends on interpretation of mixed model
- At least a gap between the proof setting and the reality

AE then Hash (AEtH)

AEtH: MRAE-preservation

- If Π (AE) is MRAE, so is $\mathrm{AEtH}[\Pi, H]$

Very close to CTX: key diff is inclusion of last r bits of C ($C|_r$) in the output

  - Any part of C is fine for the input of H [CK25]

- AD is given to AE **and** H for MRAE preservation
- Proofs are given under mixed model: H-as-RO + secure AE

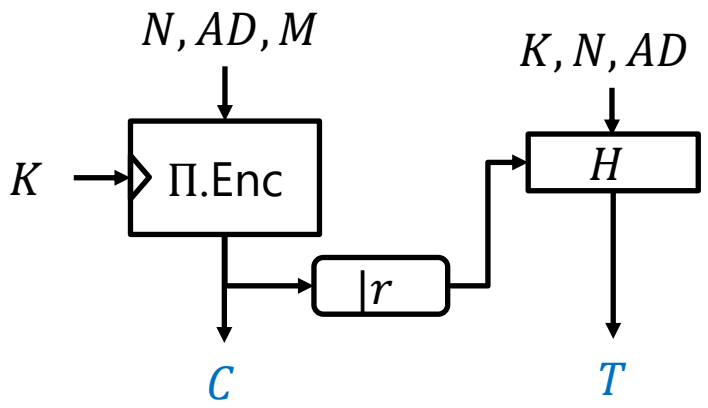

PRIV attack against AEtH

- Let AE = SIV-like MRAE. Last r bits of C be V ($C = (D, V)$)
- Use CTR mode, $C[i] = M[i] \oplus H(K, N, AD, V \oplus (i-1))$, $V = \mathrm{MAC}(K, N, AD, M)$ for some MAC (PRF). Follows SIV template, so MRAE
- PRIV attack: an encryption of (N, AD, M) reveals $M[1]$ as $C[1] \oplus M[1] = T$
- Key recovery is possible if $C[i] = M[i] \oplus H\big(K, N, AD, V \oplus (i-1)\big) \oplus K$.

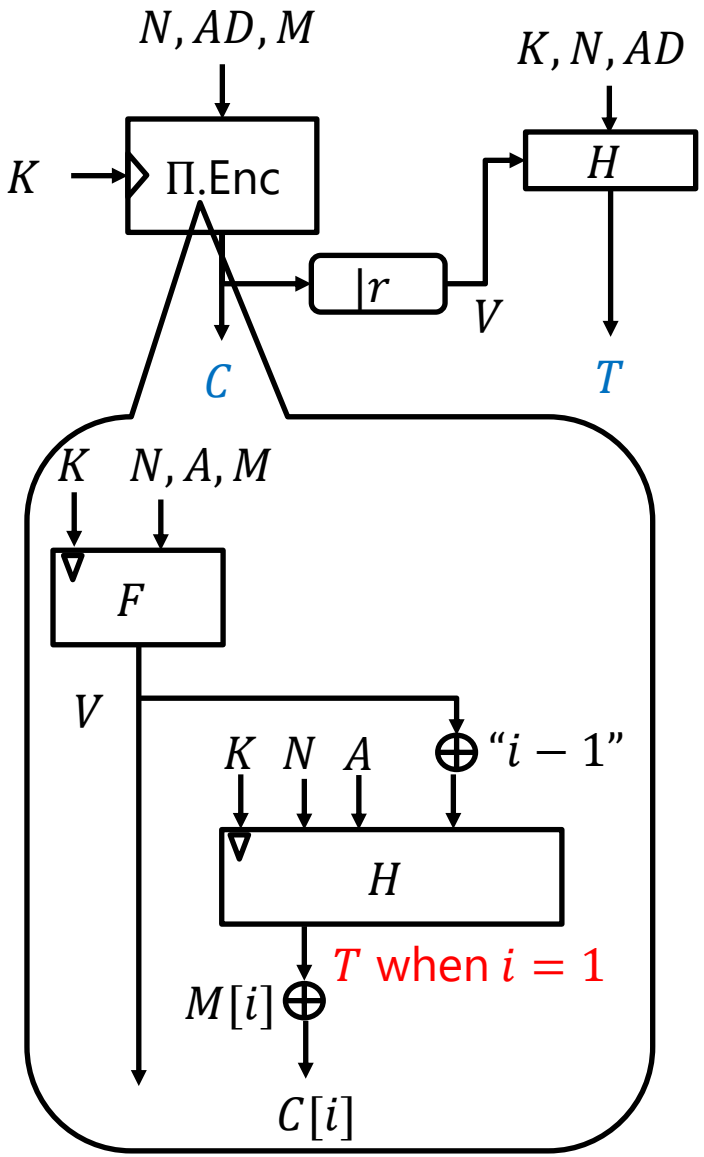

Other attacks against CK25

- Other CK25 GTs except HtAE could be attacked

- Attack principle: for some X, let AE and GT invoke $H(\mathrm{X})$
  - by "hacking" the order/contents of H's arguments, in a natural-looking way
  - so that $H(X)$ is obtained from C

- AEaH attacks are the most intuitive
  - details of some other attacks are quite different

PACT/comPACT

- Bhattachrjee, Bhaumik and Dhar (ePrint 2024/1382)
- An alternative to CTX [CR22], using a hash H and a block cipher E
  - **API-generic**
  - Clever idea to suppress ciphertext expansion as CTX (smaller than CK25 GTs)
  - needs a mild assumption on AE to ensure CMT after transform
- comPACT: nullify AD input to AE (AD is given to H)

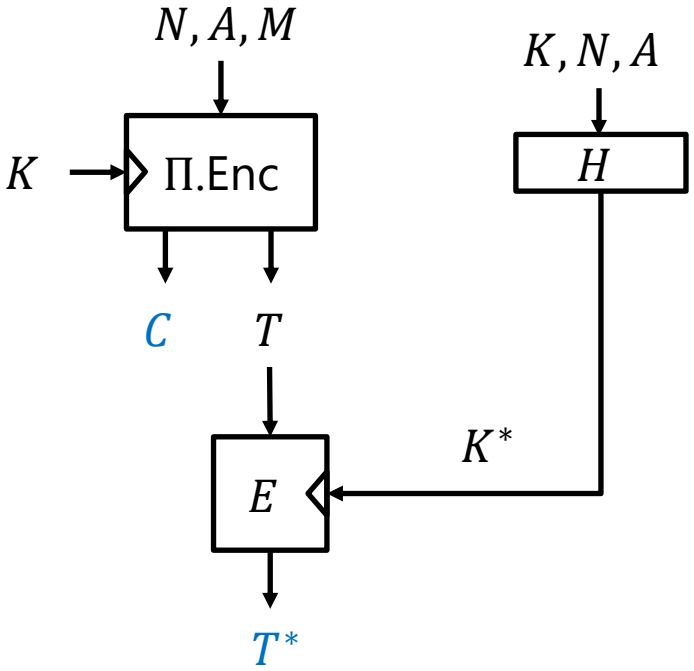

Bhattacharjee, Bhaumik, and Dhar. Universal context commitment without ciphertext expansion. ePrint 2024/1382

PACT/comPACT

- PACT: uses a hash H and a block cipher E
- H as RO, E as Ideal Cipher (IC)
- MRAE-preserving
- CMT: CR for H + Ciphertext collision (CC) for AE + E as IC
  - CC: find (KNAMCT), (K'N'A'M'CT') under sampling T under dist s.t. point probability is $\leq \epsilon$

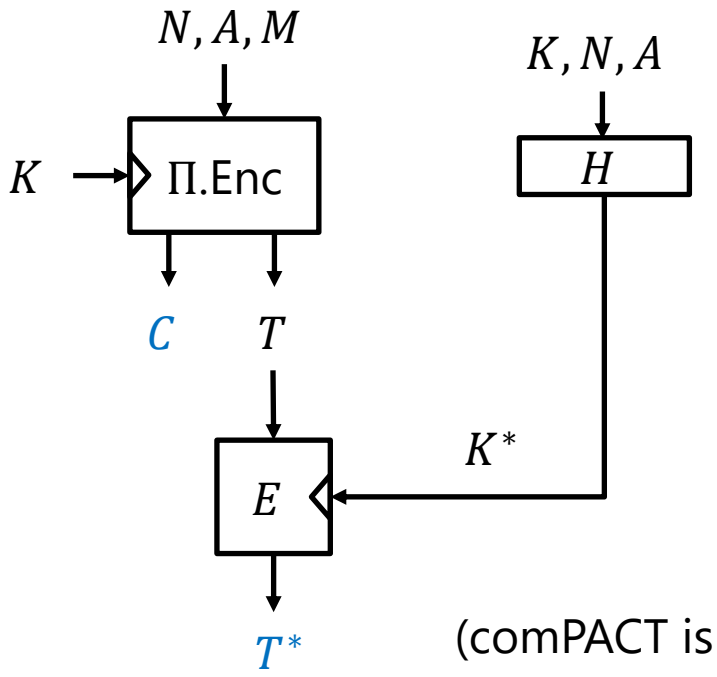

(comPACT is obtained by nullifying the AD input of AE)

PRIV attack against PACT

- Let AE = SIV (same as AEaH)
- Inside AE, use the key derivation $K^* = H(K, N, A)$, $C[i] = M[i] \oplus E_{K^*}\big(T \oplus (i-1)\big)$. T is a PRF of (N, A, M) w/ another key derivation (any black-box secure one)
- $C[1] \oplus T^* = M[1]$ as $E_{K^*}\big(T \oplus (i-1)\big) = T^*$, break of PRIV and plaintext recovery
- Extends to key recovery if $C[i] = M[i] \oplus E_{K^*}\big(T \oplus (i-1)\big) \oplus K$

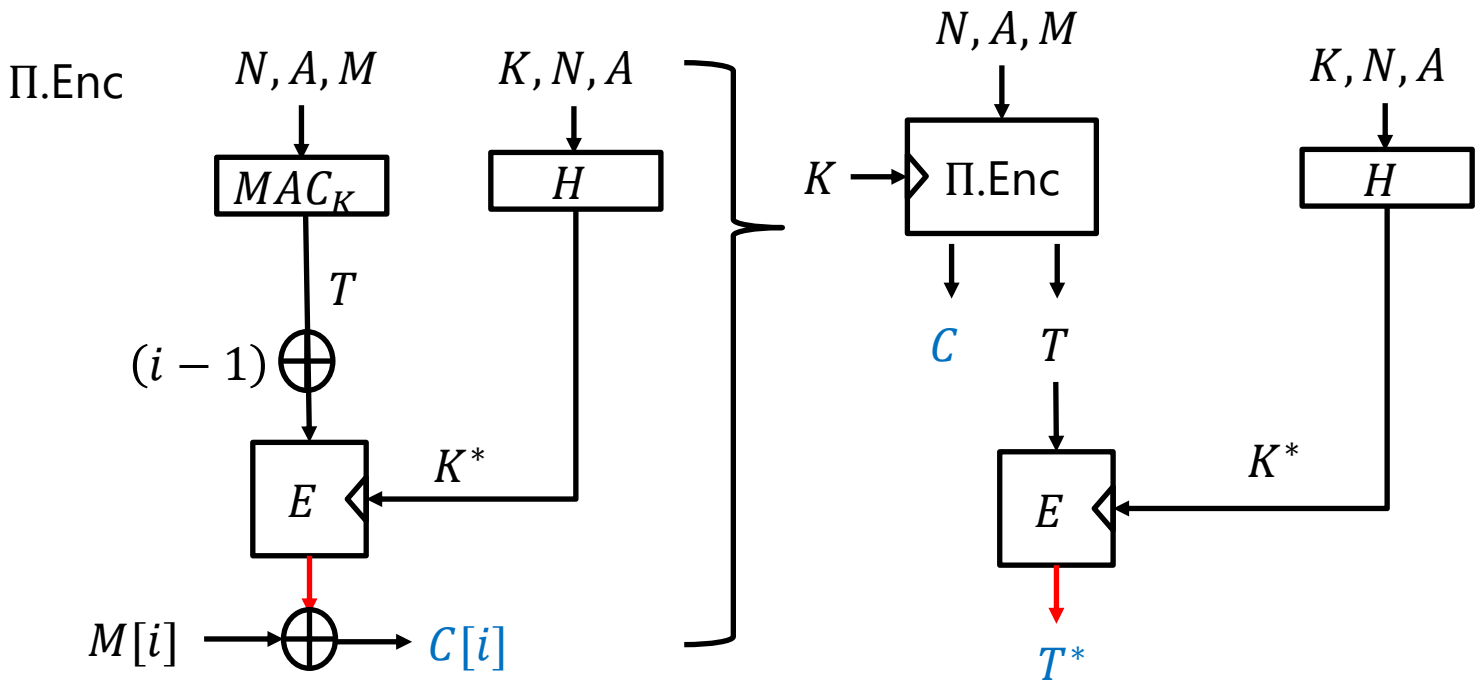

AUTH attack against PACT

- Use UH-then-Enc MAC for SIV
- AE: $C = Enc(K, N, M), T = E^{-1}(K^*, V). V = GHASH\big(L, (A, C)\big), L = KDF(K), K^* = H(K, N, cst/A)$
  - Any Enc is fine. For PACT Enc = Tweakable WBC (for MRAE), for comPACT Enc = (e.g.) CTR
- After PACT: $T^* = E(K^*, T) = V$. Thus V leaks, so L leaks
- AUTH attack:
- 1. encrypt $(N, A, M) \rightarrow (C, T^*)$. Recover V from T^*. Recover GH key L from V, A, C.
- 2. decrypt (N, A, C', T^*) s.t. $GHASH\big(L, (A, C')\big) = V$. will be accepted w/ prob.1

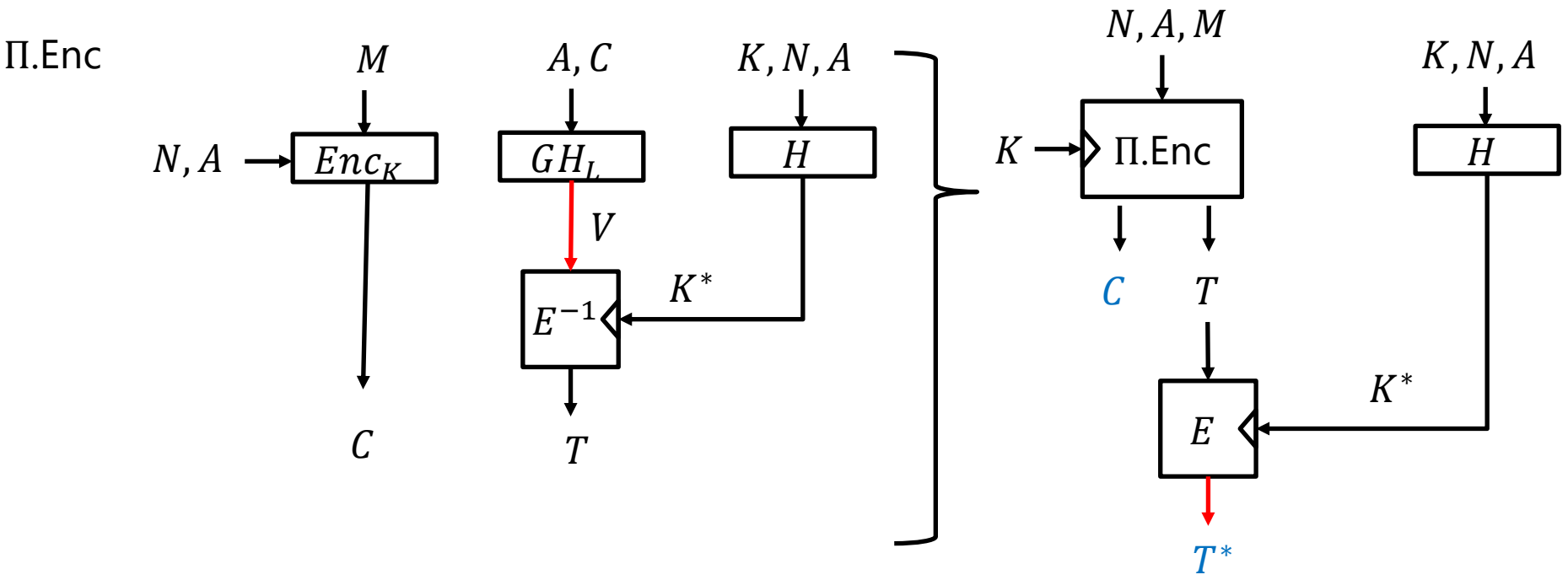

Next step: how to fix?

- Root cause: mixed security model
- A GT scheme under STD model will be safe, no matter how H is instantiated and shared with AE
- We keep merits of CK25, want to change minimal
  - Strictly generic
  - NAE/MRAE-preservation
  - Absence of nonce-based rekeying (except chaSIV)

Key separation

- Apply PRG $G: \mathcal{K} \to \mathcal{K}^2$ for key separation on the top: one for AE, one for GT
- Rekey but one-time: avoiding (costly) nonce-based rekeying
- Establish STM proofs of the modified transforms: now safely instantiable
  - assuming Right-CR (i.e. collison on K_2 is hard) and PRG for G
  - and PRF for H

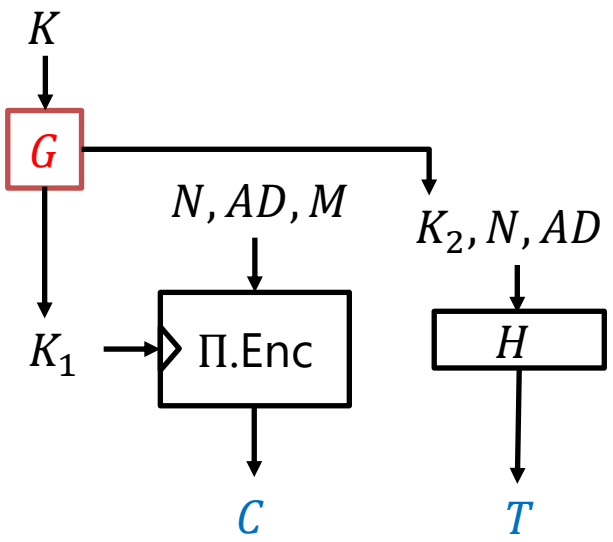

Fixing CK25

- Works for fixing all broken CK25 schemes
  - AEaH, EtH, and AEtH
  - chaSIV has a more efficient solution
- HtAE: No need to fix. Just change the assumption on H to STM one (right-CR + PRF)

Ex. Theorems for the fixed AEaH

Theorem 1. *Let* $\mathcal{A}_{\mathsf{priv}}$ *and* $\mathcal{A}_{\mathsf{auth}}$ *be* $(q_e, \sigma_e, \mathtt{tm})$*-PRIV and* $(q_e, q_d, \sigma_e, \sigma_d, \mathtt{tm})$*-AUTH adversaries against* $\mathsf{AEaH\text{-}KS}[\Pi, \mathsf{G}, \mathsf{H}]$. *Let* $q = q_e + q_d$ *and* $\sigma = \sigma_e + \sigma_d$. *Then*

$$\mathbf{Adv}^{\mathtt{priv}}_{\mathsf{AEaH\text{-}KS}[\Pi,\mathsf{G},\mathsf{H}]}(\mathcal{A}_{\mathsf{priv}}) \le \mathbf{Adv}^{\mathtt{prg}}_{\mathsf{G}}(\mathcal{A}_{\mathsf{G}}) + \mathbf{Adv}^{\mathtt{prf}}_{\mathsf{H}}(\mathcal{A}_{\mathsf{H}}) + \mathbf{Adv}^{\mathtt{priv}}_{\Pi}(\mathcal{A}_{\Pi})$$

$$\mathbf{Adv}^{\mathtt{auth}}_{\mathsf{AEaH\text{-}KS}[\Pi,\mathsf{G},\mathsf{H}]}(\mathcal{A}_{\mathsf{auth}}) \le \mathbf{Adv}^{\mathtt{prg}}_{\mathsf{G}}(\mathcal{A}'_{\mathsf{G}}) + \mathbf{Adv}^{\mathtt{prf}}_{\mathsf{H}}(\mathcal{A}'_{\mathsf{H}}) + \mathbf{Adv}^{\mathtt{auth}}_{\Pi}(\mathcal{A}'_{\Pi}) + \frac{q_d}{2^t},$$

holds, where $\mathcal{A}_{\mathsf{G}}$ *and* $\mathcal{A}'_{\mathsf{G}}$ *are* $\mathtt{tm}'$*-PRG adversaries.* $\mathcal{A}_{\mathsf{H}}$ *is a* $(q_e, \sigma_e, \mathtt{tm}')$*-PRF adversary,* $\mathcal{A}_{\Pi}$ *is a* $(q_e, \sigma_e, \mathtt{tm}')$*-PRIV adversary,* $\mathcal{A}'_{\mathsf{H}}$ *is a* $(q, \sigma, \mathtt{tm}')$*-PRF adversary, and* $\mathcal{A}'_{\Pi}$ *is a* $(q_e, q_d, \sigma_e, \sigma_d, \mathtt{tm}')$*-AUTH adversary.*

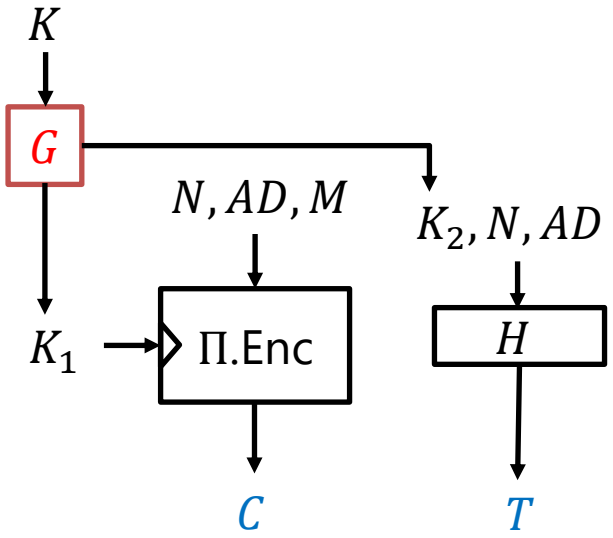

Theorem 2. *Let* $\mathcal{A}_{\mathsf{cmt}}$ *be* $\mathtt{tm}$*-CMT adversary against* $\mathsf{AEaH\text{-}KS}[\Pi, \mathsf{G}, \mathsf{H}]$.

$$\mathbf{Adv}^{\mathtt{cmt}}_{\mathsf{AEaH\text{-}KS}[\Pi,\mathsf{G},\mathsf{H}]}(\mathcal{A}_{\mathsf{cmt}}) \le \mathbf{Adv}^{\mathtt{cr}}_{\mathsf{H}}(\mathcal{A}_{\mathsf{H}}) + \mathbf{Adv}^{\mathtt{rcr}}_{\mathsf{G}}(\mathcal{A}_{\mathsf{G}}),$$

where $\mathcal{A}_{\mathsf{H}}$ *is a* $\mathtt{tm}'$*-CR adversary and* $\mathcal{A}_{\mathsf{G}}$ *is a* $\mathtt{tm}'$*-RCR adversary.*

Fixing CTX and CTY

- CTX and CTY [BH24] use mixed model, yet we did not find attacks
- KS works for getting STM-secure variations of CTX and CTY
- Proofs: can reuse the original mixed-model proofs, mostly adding one hybrid on the top of existing proofs…

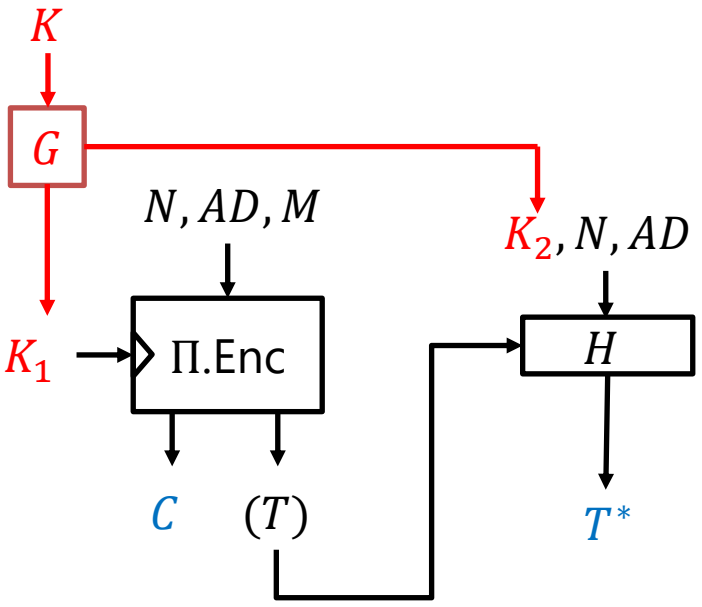

CTX-KS

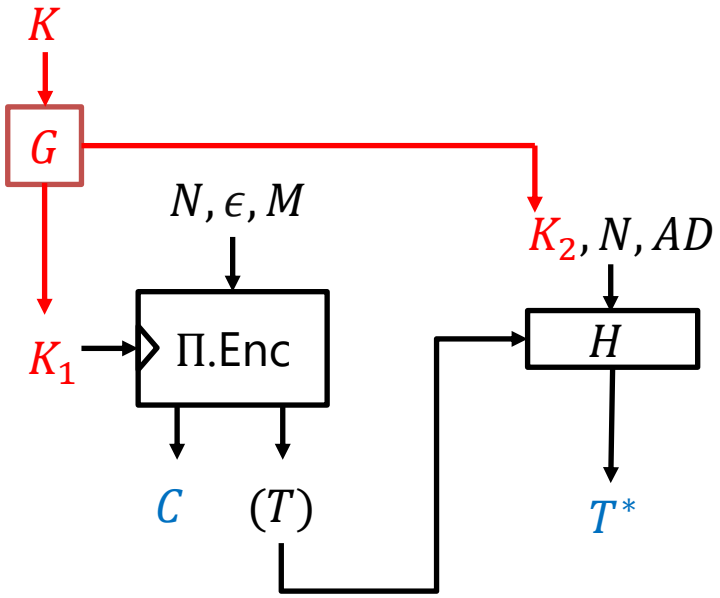

CTY-KS

Summary of Fix

Base Scheme	How to fix	Algorithmic change	Nonce-based Rekey	Add. Comp. (by total input length)
HtAE	H as right-CR + PRF	No	Yes	0
AEaH	KS	Yes		$O(\|K\|)$
EtH	KS	Yes		$O(\|K\|)$
AEtH	KS	Yes		$O(\|K\|)$
chaSIV	Nonce-based KS + remove nonce from H's input	Yes	Yes (as original)	0
CTX	KS	Yes		$O(\|K\|)$
CTY	KS	Yes		$O(\|K\|)$

Concluding remarks

- Revisit some generic transform for committing AE
- Exhibiting the dangerous aspect of mixed models; **Do not mix. Hazardous!**
- STM variants of CK25 transforms w/ key separation, inheriting their benefits

- See https://eprint.iacr.org/2026/240 for the full details

Thank you!